Gearbox catalog FAST GEAR 12JS200T, 12JS200TA, 9JS150T-B, 9JS135T-B, 9JS119T-B, 8JS100T-B, 8JS100TA-B, 8JS130TA-B, 8JS130TA-B

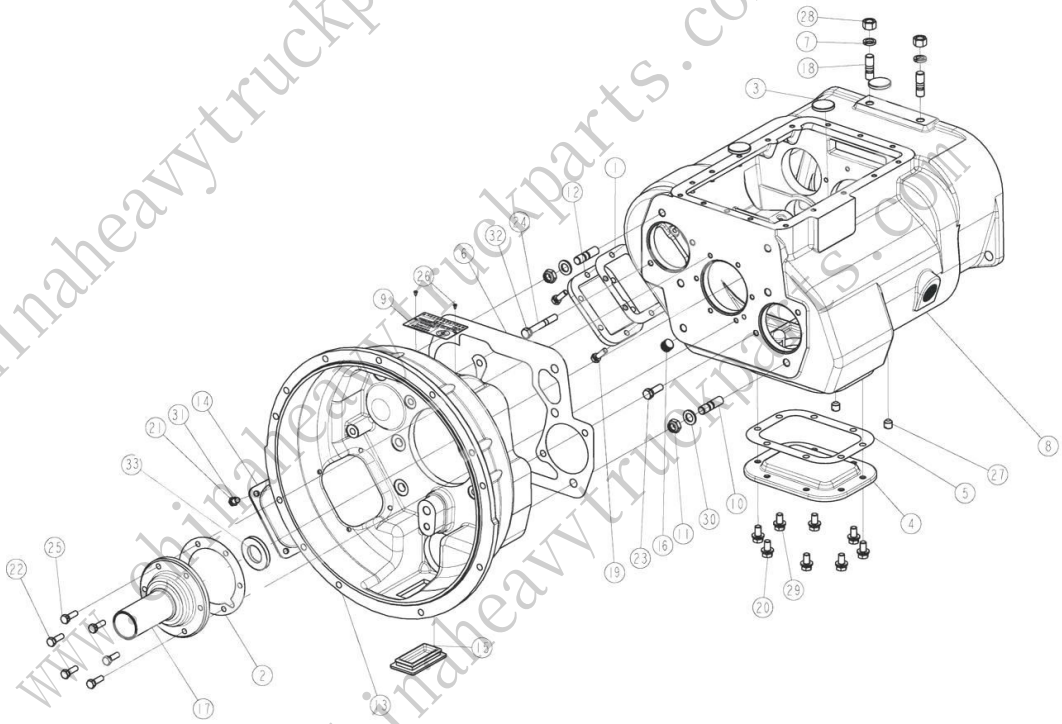

Gearbox housing and clutch housing assembly

one	1684	Side hatch for power take-off	one	√	√	√	√	√	√	√	√	√
2	14311	First shaft bearing cover gasket	one	√	√	√	√	√	√	√	√	√
3	14373	Magnet	3	√	√	√	√	√	√	√	√	√
4	16596	Power take-off low manhole cover	one	√	√	√	√	√	√	√	√	√
5	16929	Low power take-off gasket	one	√	√	√	√	√	√	√	√	√
6	20822	Clutch housing	one	√	√	√	√	√	√	√	√	√
7	Q40316	Spring washer	2	√	√	√	√	√	√	√	√	√
8	12JS160T-1701015	Carter Gearbox	one	√	√							
	18686					√	√	√				
	JS100-1701015								√	√	√	√
nine	12JS200T-1702021-3	tag	one	√	√							
10	C01056	Bolt	6	√	√	√	√	√	√	√	√	√
eleven	GB890-80-M16 * 15	Thin Nylon Lock Nut	6	√	√	√	√	√	√	√	√	√
12	JS130T-1701020	Power take-off manhole cover	one	√	√	√	√	√	√	√	√	√
thirteen	JS180-1601015-6	Clutch housing	one	√	√	√	√	√	√	√	√	√
	A-3874											
14	JS180-1601016-1	Manhole cover	one	√	√							

fifteen	JS1601016-2	Manhole cover	one	√	√							
sixteen	Q61304	Bung	one	√	√	√	√	√	√	√	√	√
17	JS180A-1701040-3	First shaft bearing cover	one	√	√	√	√	√	√	√	√	√
	F91409					√	√	√	√	√	√	√
eighteen	Q1231630	Bolt	2	√	√	√	√	√	√	√	√	√
nineteen	Q1421032	Bolt assembly with spring washer	6	√	√	√	√	√	√	√	√	√
twenty	Q150B1025	Bolt	4	√	√	√	√	√	√	√	√	√
21	Q150B1032	Bolt	4	√	√	√	√	√	√	√	√	√
22	Q150B1238	Bolt	2	√	√	√	√	√	√	√	√	√
23	Q150B1290	Bolt	2	√	√	√	√	√	√	√	√	√
24	Q170B1032	Bolt with hole	2	√	√	√	√	√	√	√	√	√
25	Q2713508	Self tapping screw	2	√	√	√	√	√	√	√	√	√
26	Q2821616	Clamping screw	2	√	√	√	√	√	√	√	√	√
27	Q341B16	I-shaped nut	2	√	√	√	√	√	√	√	√	√
28	Q40112	Flat washer	8	√	√	√	√	√	√	√	√	√
29th	Q40116	Flat washer	6	√	√	√	√	√	√	√	√	√
thirty	Q40310	Spring washer	10	√	√	√	√	√	√	√	√	√
31	Q40312	Spring washer	4	√	√	√	√	√	√	√	√	√
32	F500A-1802191	Oil seal kit	one	√	√							
	F91410					√	√	√	√	√	√	√

Second shaft assembly

one	16763	Snap ring	6	√	√				√	√	√	√
			5			√	√	√				
2	12JS100T-170118	Slippery sleeve	one	√	√							
	JS150T-1701108	Slippery sleeve low gear and reverse	one			√	√	√				
	JS130T-1701108								√	√	√	√
3	12JS100T-1701121	Second shaft key	one	√	√							
	JS150T-1701121B					√	√	√				
	JS130T-1701121B								√	√	√	√
4	12JS200T-1701122	Second shaft gear spline gasket	5	√	√							
			4			√	√	√				
			3						√	√	√	√
5	12JS160T-1701123	Gasket, second shaft	3	√	√							
			4			√	√	√				
			2						√	√	√	√
6	12JS160T-1701125	Gasket reverse gear of the second shaft	one	√	√							
	18701								√	√	√	√
7	12JS160T-1701170	1/2 gear synchronizer kit	one	√	√				√	√	√	√
	JS130T-1701180					√	√	√				
8	12JS200T-1701105	Second shaft	one	√	√							
	JS150T-17011058					√	√	√				
	JS130T-17011058								√	√	√	√
nine	12JS200T-1701110	Second gear reverse gear	one	√	√							
	JS150T-17011098					√	√					

www.chinaheavytruckparts.com

	JS119T-17011098							√				
	JS100T-1701111								√	√	√	√
10	12JS200T-1701111	Gear wheel first gear second shaft	one	√	√							
	JS150T-1701111B					√						
	JS135T-1701111B						√					
	JS119T-1701111B							√				
	JS100T-1701112B								√	√		
	JS130T-1701112B										√	√
eleven	12JS200T-1701112	Second gear second gear	one	√	√							
	JS150T-1701112B					√	√					
	JS119T-1701112B							√				
	JS100T-1701130B								√	√		
	JS130T-1701130B										√	√
12	12JS200T-1701113	Gear third gear of the second shaft	one	√	√							
	JS150T-1701113B					√						
	JS135T-1701113B						√					
	JS135T-1701131B							√				
	JS130T-1701131B								√			
	JS100TA-1701131B	Second shaft super speed gear								√		
	JS130T-1701131B										√	
	JS130TA-1701131B	Second shaft super speed gear										√
thirteen	12JS200T-1701114	Gear wheel fourth gear second shaft	one	√	√							
14	12JS200T-1701115-1	Gear of the fifth gear of the second shaft	one	√								
	12JS160T-1701115-1				√							
fifteen	12JS200T-1701116-1	First shaft gear	one	√								
	12JS160T-1701116-1				√							
	JS150T-1701030B					√						
	JS135T-1701030B						√					
	JS119T-1701030B							√				
	JS100T-1701031B								√			
	JS100TA-1701031B									√		
	JS130T-1701031B										√	
	JS130TA-1701031B											√
sixteen	JS130T-1701180	Synchronizer kit 3/4 gear	2	√	√	√	√	√	√	√	√	√
17	Q5280310	Spring finger	one	√	√	√	√	√	√	√	√	√
eighteen	12JS160T-1701106	Main Shaft Gear Washer	one	√	√							
nineteen	12JS160T-1701107	Reverse gear retaining ring	one	√	√							
	JS150T-1701108	Second gear low gear	one			√	√					
	JS119T-1701110B							√				

www.chinaheavytruckparts.com

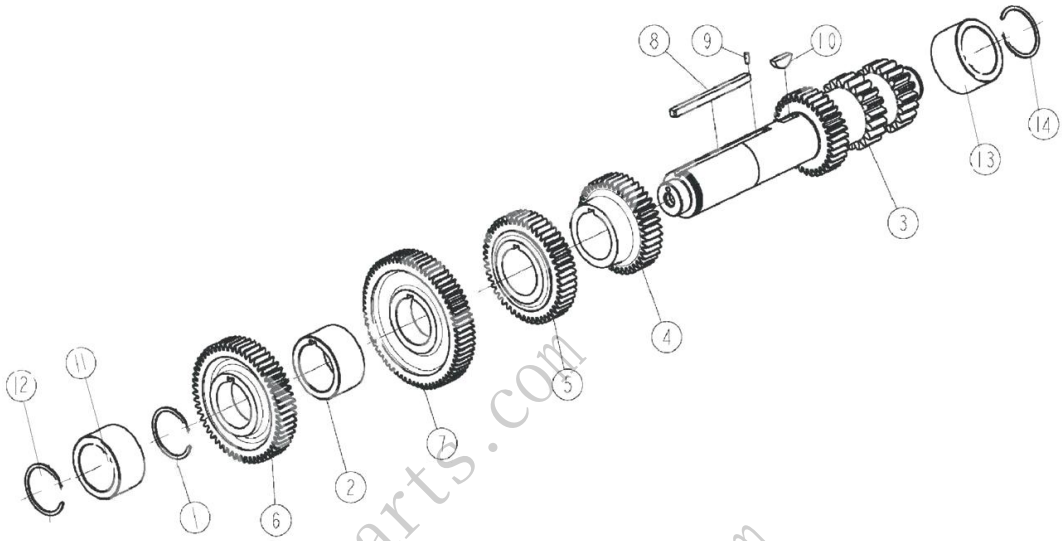

Intermediate Shaft Assembly

one	19198	Countershaft circlip	2	√	√	√	√	√	√	√	√	√
2	12JS160T-1701057	Sleeve	2	√	√							
3	12JS200T-1701048	Intermediate shaft	2	√	√							
	JS150T-1701048B	Intermediate shaft				√	√					
	JS119T-1701048B	Intermediate shaft						√				
	JS130T-1701048B	Intermediate shaft							√	√	√	√
4	12JS200T-1701050	Intermediate Shaft Gear Trimming Gear	2	√	√							
	JS180T-1701051B	Intermediate Shaft Gear Trimming Gear				√						
	JS135T-1701051B	Intermediate Shaft Gear Trimming Gear					√					
	JS119T-1701051B	Intermediate Shaft Gear Trimming Gear						√				
	JS100T-1701051B	Intermediate Shaft Gear Trimming Gear							√			
	JS100TA-1701051B	Countershaft super gear								√		
	JS130T-1701051B	Countershaft super gear									√	
	JS130TA-1701051B	Countershaft super gear										√
5	12JS200T-1701051	Gear wheel fourth gear intermediate shaft	2	√	√							
6	12JS200T-1701056	Drive Shaft	2	√								
	12JS200T-1701052	Drive Shaft			√							
	JS150T-1701056B	Drive Shaft				√						
	JS135T-1701054	Drive Shaft					√					
	JS119T-1701054	Drive Shaft						√				
	JS100T-1701056B	Drive Shaft							√			
	JS100TA-1701056B	Drive Shaft								√		
	JS130T-1701056B	Drive Shaft									√	
	JS130TA-1701056B	Drive Shaft										√
7	12JS200T-1701052	Fifth gear of countershaft	2	√								
	12JS200T-1701056	Fifth gear of countershaft			√							
8	16JS200T-1701055	Intermediate shaft key	2	√	√							
	19673	Intermediate shaft key				√	√	√	√	√	√	√
nine	Q5280514	Elastic finger	2	√	√	√	√	√	√	√	√	√
10	X-6-E	Semicircular key	2	√	√	√	√	√	√	√	√	√
eleven	192309E	Bearing	4	√	√							
	370309Y	Bearing				√	√	√	√	√	√	√
12	C01021	Snap ring	4	√	√							
thirteen	102309E	Bearing	4	√	√							
	102308E	Bearing				√	√	√	√	√	√	√
14	Q43145	Resilient chipper	4	√	√							
	14317	Resilient chipper				√	√	√	√	√	√	√

www.chinaheavytruckparts.com

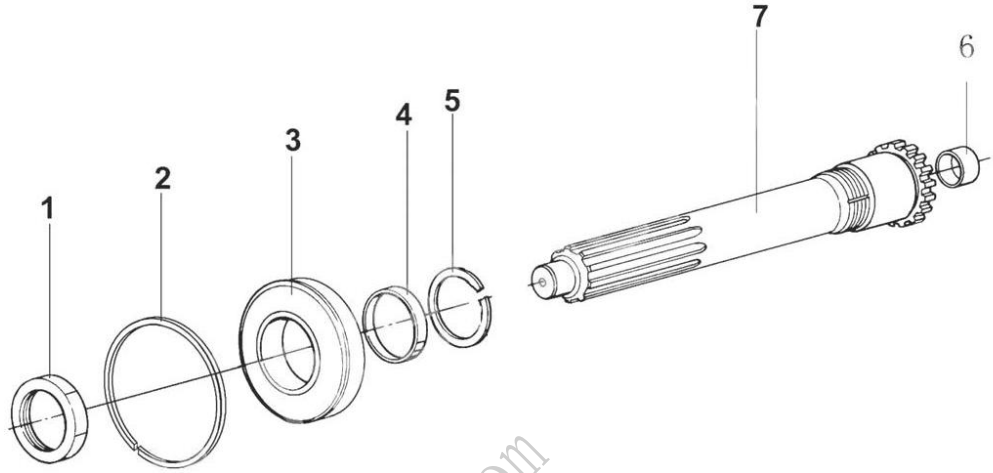

First shaft assembly

one	JS180A-1701036	First shaft nut	one	√	√							
	8858					√	√	√	√	√	√	√
2	C01020	Snap ring	one	√	√	√	√					
3	150212K	Bearing	one	√	√	√	√	√	√	√	√	√
4	16463	Gear lining	one	√	√	√	√	√	√	√	√	√
5	14750	Snap ring	one	√	√	√	√	√	√	√	√	√
6	16566	Guide shaft for second shaft	one	√	√	√	√	√	√	√	√	√
7	JS180A-1701030	First shaft	one	√	√							
	19694					√	√	√	√	√	√	√

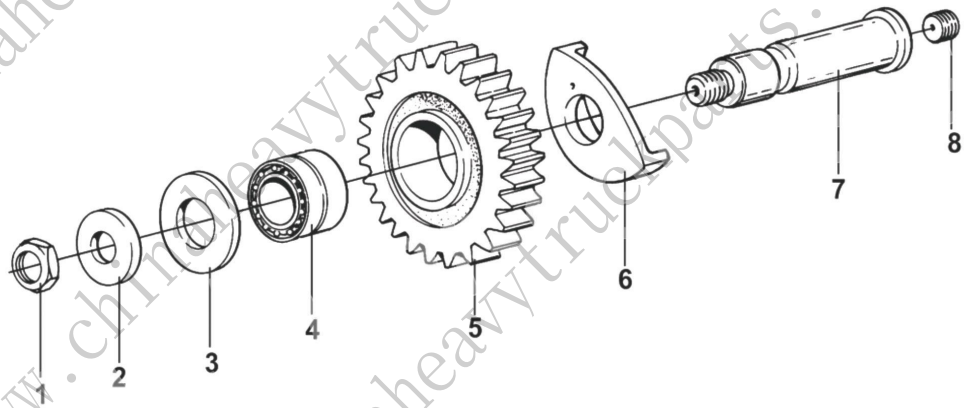

Reverse countershaft assembly

one	GB890-86	Nut M20 * 1.5	2	√	√							
	GB890-80	Nut M16 * 1.5	2			√	√	√	√	√	√	√
2	JS220-1701088	Reverse intermediate shaft washer	2	√	√							
	14283					√	√	√	√	√	√	√
3	JS220-1701087	Reverse washer	2	√	√							
	14282					√	√	√	√	√	√	√
4	DS100-1701085	Needle bearing	2	√	√							
	14287					√	√	√	√	√	√	√
5	12JS200T-1701083	Reverse gear	2	√	√							
	JS150T-1701083B					√	√					
	JS119T-1701083B							√				
	JS100-1701082								√	√	√	√
6	12JS160T-1701084	Reverse Cup Washer	2	√	√							
	16403					√	√	√				
	JS100-1701083								√	√	√	√
7	JS220-1701082	Reverse intermediate shaft	2									
	16405					√	√	√	√	√	√	√
8	Q2821212	Clamping screw	2	√	√	√	√	√	√	√	√	√

www.chinaheavytruckparts.com

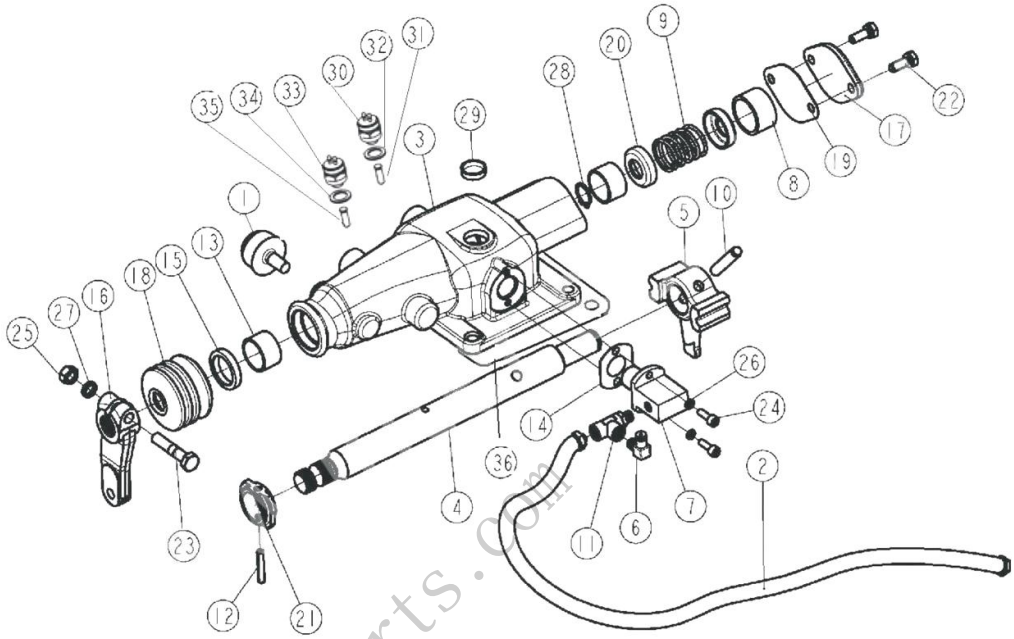

Control gear assembly

one	15276	Vent plug	one	√	√							
2	55534	Air duct kit	one	√	√							
3	12JS160T-1703015	Carter Control	one	√	√							
	F96194					√	√	√	√	√	√	√
4	12JS160T-1703017	Wishbone	one	√	√							
	F99679					√	√	√	√	√	√	√
5	12JS160T-1703018	Holder	one	√	√							
	F99585					√	√	√	√	√	√	√
6	12JS160T-1703021	90 ° spline	one	√	√							
7	12JS160T-1703022	Air control valve	one	√	√							
8	12JS160T-1703024	Limit sleeve	one	√	√							
nine	12JS160T-1703027	Pressure spring	one	√	√							
	F99983					√	√	√	√	√	√	√
10	C03030	Finger	one	√	√	√	√	√	√	√	√	√
eleven	C03052	Union three	one	√	√	√	√	√	√	√	√	√
12	C09035	Elastic finger	one	√	√	√	√	√	√	√	√	√
thirteen	F91345	Wishbone bushing	2	√	√	√	√	√	√	√	√	√
14	F91353	Air valve gasket double H	one	√	√	√	√	√	√	√	√	√
fifteen	F91444	Stuffing box	one	√	√	√	√	√	√	√	√	√
sixteen	F96035	External gear lever	one	√	√	√	√	√	√	√	√	√
17	F99666-2	Sidewall	one									
eighteen	F99669	Case	one	√	√	√	√	√	√	√	√	√
nineteen	F99672-2	End gasket	one	√	√							
twenty	F99673-1	Spring support	2	√	√							
21	F99681	Low gear and reverse gear control unit	one	√	√	√	√	√	√	√	√	√
22	Q1420822	Bolt assembly with washer	2	√	√	√	√	√	√	√	√	√
23	Q151B1050	Small tooth bolt	one	√	√	√	√	√	√	√	√	√
24	Q218B0618	Screw	2	√	√	√	√	√	√	√	√	√
25	Q341B10	I-shaped nut	one	√	√	√	√	√	√	√	√	√
26	Q40306	Spring washer	2	√	√	√	√	√	√	√	√	√
27	Q40310	Spring washer	one	√	√	√	√	√	√	√	√	√
28	Q43120	Elastic shaft chipper	one	√	√	√	√	√	√	√	√	√
29th	Q72224	Cup cork	one	√	√	√	√	√	√	√	√	√
thirty	0041KS	Pressure switch	one	√	√	√	√	√	√	√	√	√
31	F99702	Inclusion finger	one	√	√	√	√	√	√	√	√	√
32	Q72318T3	Cuff	one	√	√	√	√	√	√	√	√	√
33	0068DS	Pressure switch	one	√	√	√	√	√	√	√	√	√
34	C03015	Cuff	one	√	√	√	√	√	√	√	√	√
35	15899	Inclusion finger	one	√	√	√	√	√	√	√	√	√
36	1642	Hatch gasket	one	√	√	√	√	√	√	√	√	√

www.chinaheavytruckparts.com

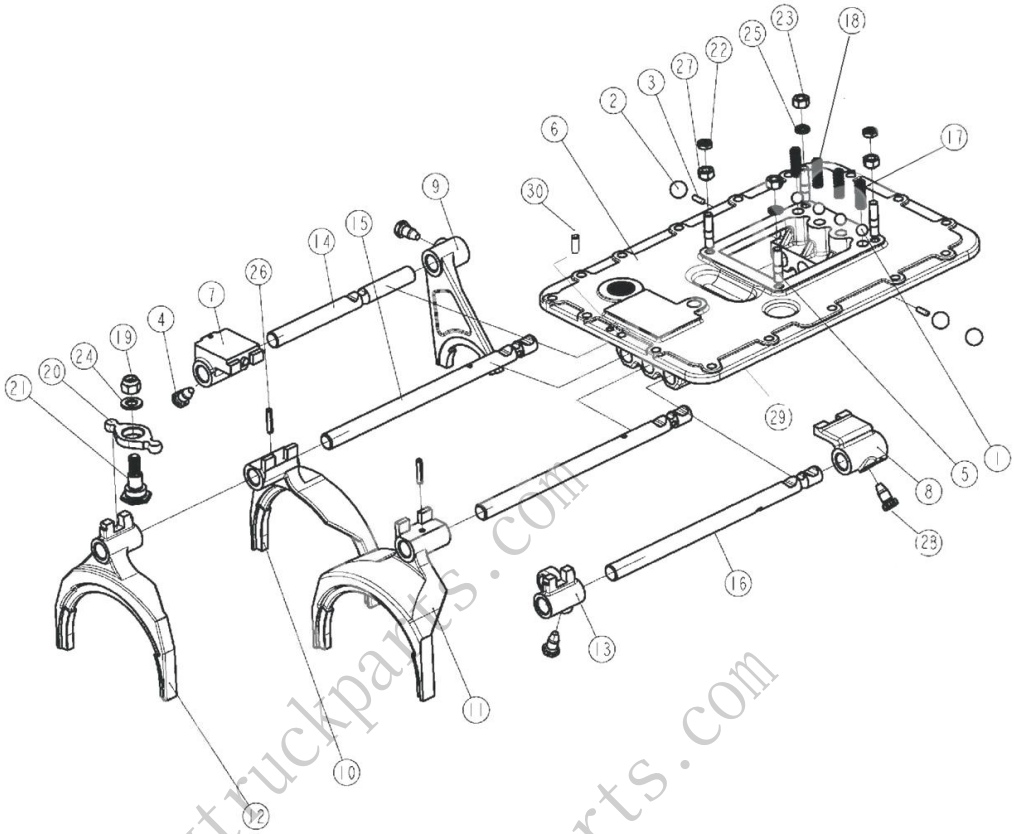

Top cover assembly

one	12.7G100BGB-T308	Steel ball	4	√	√							
			3			√	√	√	√	√	√	√
2	19.05G100BGB-T308	Steel ball	3	√	√							
			2			√	√	√	√	√	√	√
3	1634	Gear Shaft Lock Pin	2	√	√							
			one			√	√	√	√	√	√	√
4	3220	Gear shift fork lock screw	3	√	√	√	√	√	√	√	√	√
5	11066	Bolt	4	√	√	√	√	√	√	√	√	√
6	12JS160T-1702015	Top cover	one	√	√							
	JS130T-1702015					√	√	√	√	√	√	√
	JS100A-1702015											
7	12JS160T-1702050	Reverse guide block kit	one	√	√							
8	12JS160T-1702054	5/6 guide block	one	√	√							
nine	12JS160T-1702055	Reverse fork	one	√	√							
	JS150T-1702054B	Low gear and reverse fork				√	√	√				
	F99664								√	√	√	√
10	12JS160T-1702056	1/2 gear fork	one	√	√							
	JS150T-1702055B					√	√	√				
	JS130T-1702055B								√		√	
	JS130TA-1702056-1									√		√
eleven	12JS160T-1702057	3/4 fork	one	√	√							
	JS130T-1702056-1					√	√	√	√		√	
	JS130TA-1702056B									√		√
12	12JS160T-1702058	5/6 transmission fork	one	√								
	12JS160T-1702058-2				√							
thirteen	12JS160T-1702054	5/6 gear shift guide	one	√								
	12JS160T-1702059-1				√							
14	12JS160T-1702063	Reverse fork roller	one	√	√							
	JS150T-1702064					√	√	√				
	16132								√		√	
	JS100A-1702064									√		√
fifteen	12JS160T-1702064	Roller 1/2, 3/4 gear	2	√								

www.chinaheavytruckparts.com

	12JS160T-1702064-1				√							
	JS150T-1702065B	1/2 gear forks	one			√	√	√				
	JS130T-1702065B								√		√	
	JS130TA-1702065B									√		√
sixteen	12JS160T-1702066	5/6 gear forks	one	√	√							
	JS150T-1702066B	3/4 gear forks	one			√	√	√				
	JS130T-1702066B								√		√	
	JS130TA-1702066B									√		√
17	F96084	Pressure spring	one	√	√	√	√	√	√	√	√	√
eighteen	F96085	Pressure spring	3	√	√	√	√	√	√	√	√	√
nineteen	GB889-80-M12 * 1.25	Lock nut	one	√	√	√	√	√	√	√	√	√
twenty	JS100A-1702072	Holder	one	√	√	√	√	√	√	√	√	√
21	JS100A-1702073	Pin roller	one	√	√	√	√	√	√	√	√	√
22	Q351B10	Thin nut	2	√	√	√	√	√	√	√	√	√
23	Q361B10	2 nut	2	√	√	√	√	√	√	√	√	√
24	Q40112	Flat washer	one	√	√	√	√	√	√	√	√	√
25	Q40310	Spring washer	2	√	√	√	√	√	√	√	√	√
26	Q5280630	Elastic finger	2	√	√							
27	X-1-603	Nut	2	√	√	√	√	√	√	√	√	√
28	Jan-20	Gear shift fork lock screw	one	√	√	√	√	√	√	√	√	√
29th	12JS160T-1702016	Top cover gasket	one	√	√							
thirty	Q5211026	Finger	one	√	√							

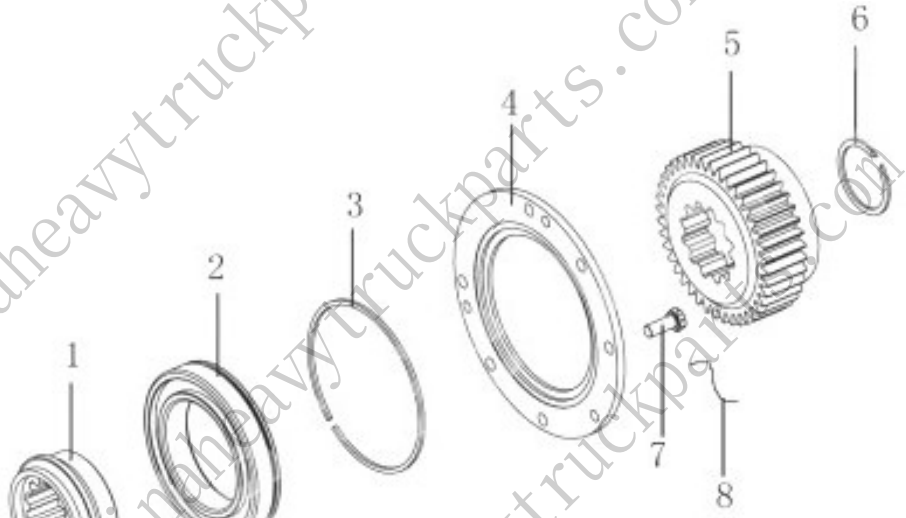

Gear reducer

one	12JS160T-1701124	Bearing support	one	√	√							
2	50118	Bearing	one	√	√	√	√	√	√	√	√	√
3	C01019	Snap ring	one	√	√	√	√	√	√	√	√	√
4	JS220-1707031	Stop plate for demultiplicator bearing	one	√	√							
	16138					√	√	√	√	√	√	√
5	12JS200T-1707030	Gear reducer	one	√	√							
	JS150T-1707030B					√						
	JS119T-1707030B						√	√				
	18869								√	√	√	√
6	16763	Snap ring	one	√	√	√	√	√	√	√	√	√
7	C09032	Bolt with hole	6	√	√	√	√	√	√	√	√	√
8	1819	Iron wire	#	√	√	√	√	√	√	√	√	√

www.chinaheavytruckparts.com

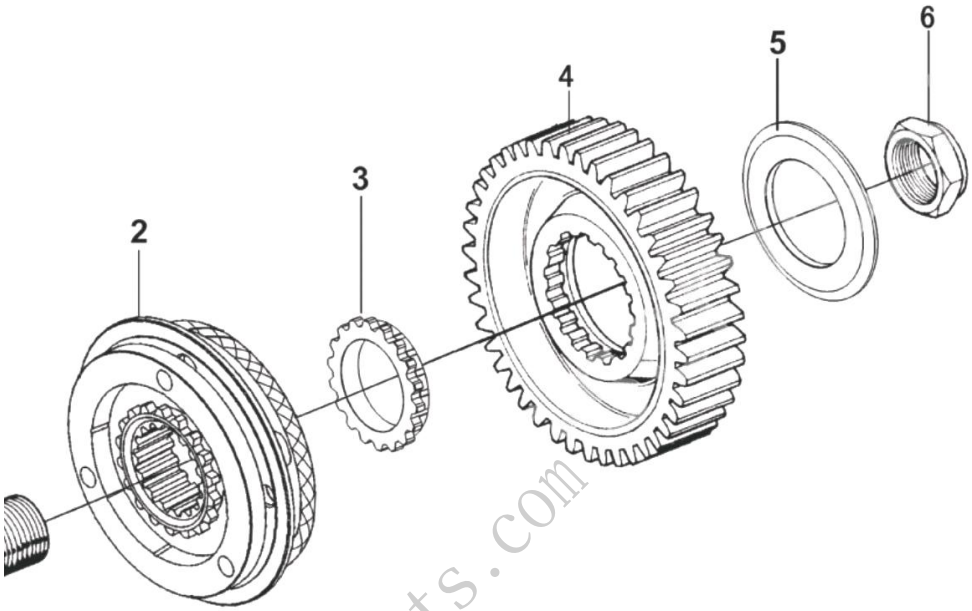

Demultiplier main shaft

one	12JS200T-1707105	Demultiplier main roller	one	√	√							
	F99882					√	√	√	√	√	√	√
2	12JS160T-1707140	Low and high gear synchronizer kit	one	√	√							
	A-5056					√	√	√	√	√	√	√
3	12JS200T-1707107	Washer of the main shaft of the multiplier	one	√	√							
	14331					√	√	√	√	√	√	√
	14332					√	√	√	√	√	√	√
4	12JS200T-1707106	Reducing gear of the main shaft of the multiplier	one	√	√							
	19726					√	√	√				
	JS100T-1707120								√		√	
	JS130T-1707120									√		√
5	12JS160T-1707108	Demultiplier main shaft gear pressure	one	√	√							
	19466					√	√	√	√	√	√	√
6	F96006	Flange nut	one	√	√	√	√	√	√	√	√	√

www.chinaheavytruckparts.com
www.chinaheavytruckparts.com
www.chinaheavytruckparts.com

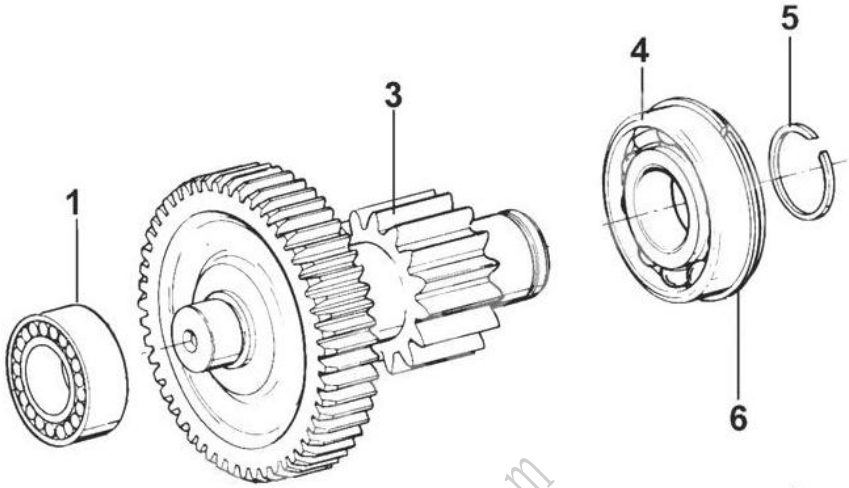

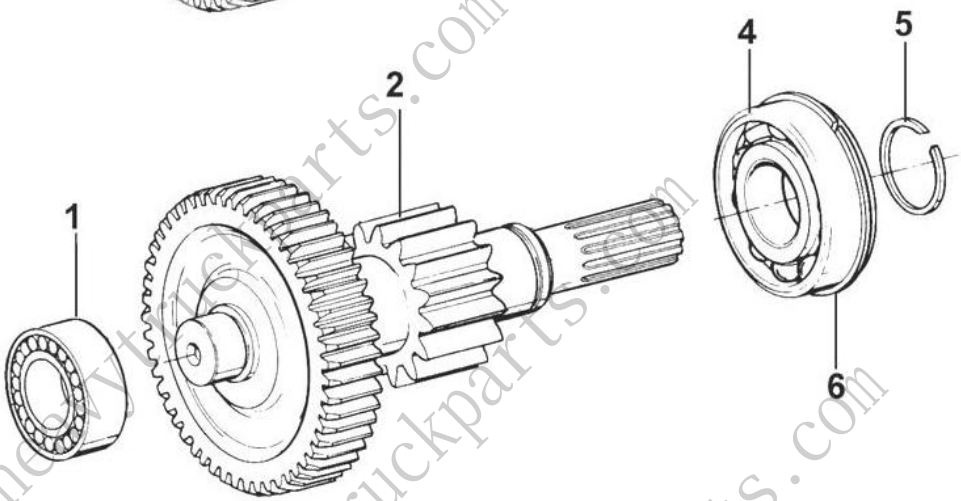

Demultiplier intermediate shafts

one	42308E	Bearing	2	√	√						
	42307E					√	√	√	√	√	√
2	12JS200T-1707047	Set of welding extension intermediate roll of demultiplier	one	√	√						
	A-4794					√					
	A-5119						√	√			
	JS130T-1707048		2						√	√	√	√
3	12JS200T-1707050	Demultiplier Welding Intermediate Roller Kit	one	√	√						
	JS150T-1707046B					√					
	A-C09019						√	√			
4	192311E	Bearing	2	√	√						
	192310E					√	√	√	√	√	√	√
5	JS180-1707051	Snap ring	2	√	√						
	16723					√	√	√	√	√	√	√
6	GB305-82	Circlip 120 / 129.7	2	√	√						
	17384					√	√	√	√	√	√	√

www.chinaheavytruckparts.com

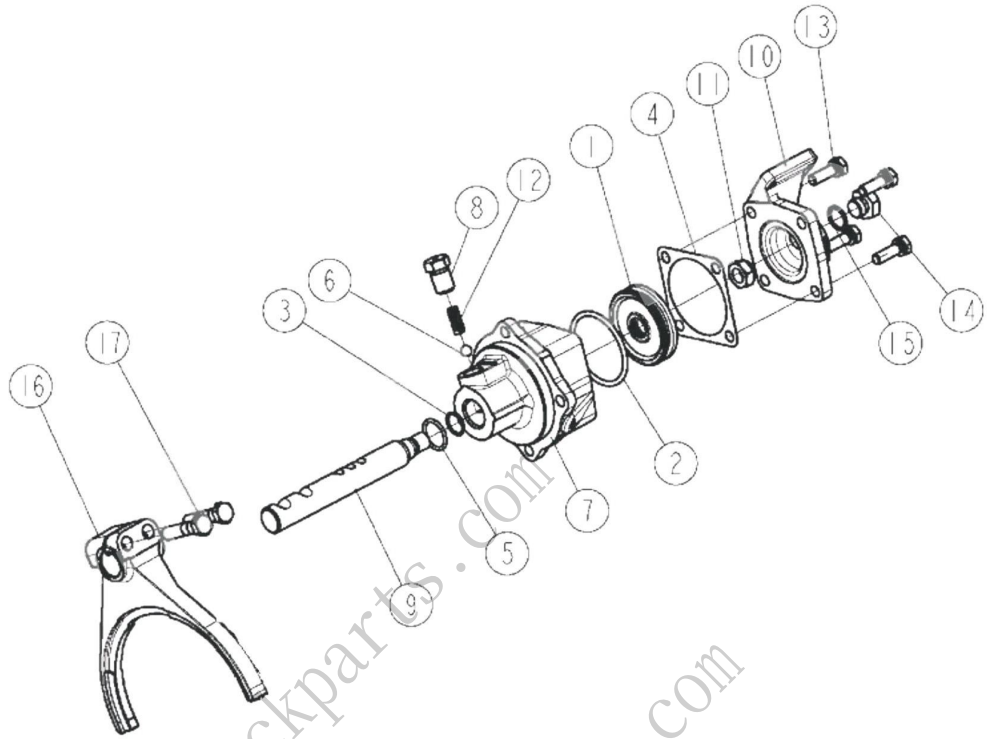

Low and high gear assembly cylinder

one	14341	Low and high gear cylinder piston	one	√	√	√	√	√	√	√	√	√
2	14344	O-shaped cuff	one	√	√	√	√	√	√	√	√	√
3	14345	O-shaped cuff	one	√	√	√	√	√	√	√	√	√
4	14349	Cylinder head cuff	one	√	√	√	√	√	√	√	√	√
5	14765	O-shaped cuff	one	√	√	√	√	√	√	√	√	√
6	10G100BGB-T30B	Steel ball	one	√	√							
7	12JS160T-1707062	Low and high gear cylinder	one	√	√							
	16778					√	√	√	√	√	√	√
8	12JS160T-1707063	Bung	one	√	√							
nine	12JS160T-1707061	Low and high gear forks	one	√	√							
	16993					√	√	√	√	√	√	√
10	F99857	Gearshift Cylinder Cover	one	√	√	√	√	√	√	√	√	√
eleven	GB890-80-M16 * 1.5	Thin lock nut	one	√	√	√	√	√	√	√	√	√
12	J80-1702080	Retaining spring	one	√	√							
thirteen	Q1421032M	Bolt	4	√	√	√	√	√	√	√	√	√
14	0069gs	Pressure switch	one	√	√	√	√	√	√	√	√	√
fifteen	X11511	Copper washer	one									
sixteen	16775	Demultiplier fork	one	√	√	√	√	√	√	√	√	√
17	Q171B1250	Screwdriver	2	√	√	√	√	√	√	√	√	√

www.chinaheavytruckparts.com
www.chinaheavytruckparts.com
www.chinaheavytruckparts.com

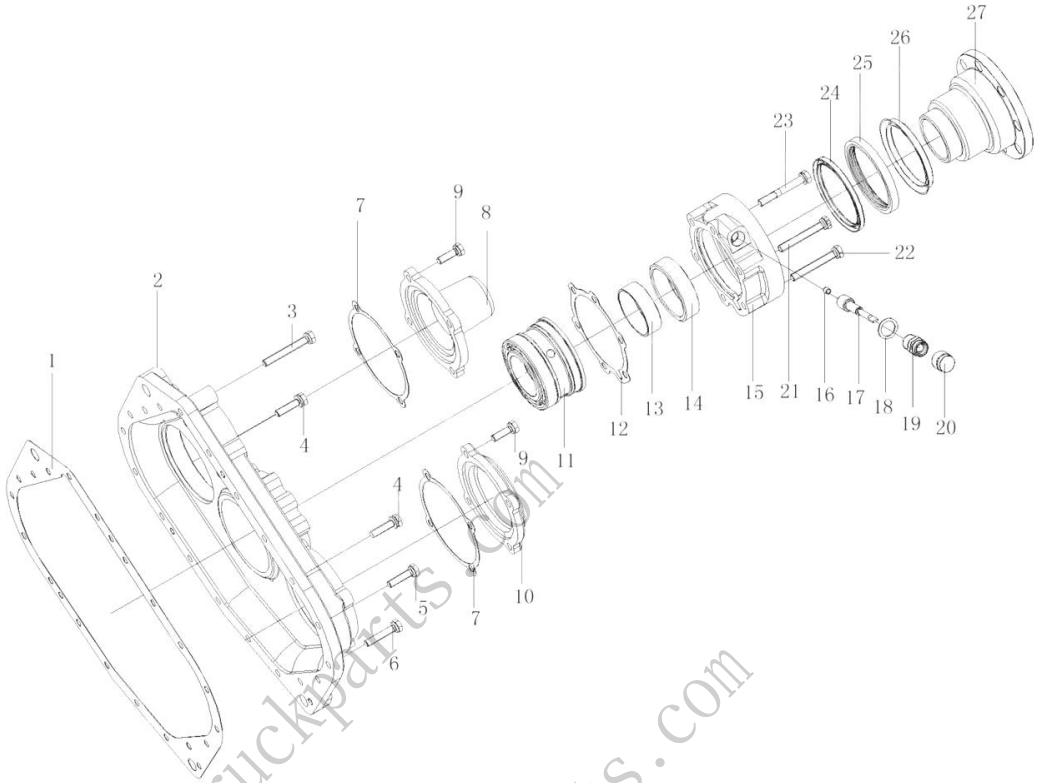

Back cover assembly

one	14335	Rear cover gasket	one	√	√	√	√	√	√	√	√	√
2	Js220-1707015	Carter back cover	one	√	√							
	F99975					√	√	√	√	√	√	√
3	Q1421075	Assembly bolt with spring washer	4	√	√							
	GB5782-86	Small bolt M10 * 50	5			√	√	√	√	√	√	√
4	Q1461050	Small bolt assembly with spring washer	2	√	√							
5	Q1421040	Assembly bolt with spring washer	eleven	√	√							
	GB5782-86	Small bolt M10 * 45	thirteen			√	√	√	√	√	√	√
6	Q1421050	Assembly bolt with spring washer	2	√	√							
7	JS180-1707053	Gasket, Bearing Cover	2	√	√							
	17352					√	√	√	√	√	√	√
8	10JS160-1707052	Extension roller cover	one	√	√							
	17376		2			√	√	√	√	√	√	√
nine	A-C09008	Bolt kit	8									
10	JS180-1707052	Gearbox Bearing Cover	one	√	√							
eleven	JS220-1707109	Bearing	one	√	√							
	717813					√	√	√	√	√	√	√
12	JS180-1707156	Gasket for the rear bearing of the main shaft of the multiplier	one	√	√							
	15532											
thirteen	JS220-1707111	Spitometer Pinion Bushing	one	√	√							
14	F91054	Speedometer pinion	one	√	√	√	√	√	√	√	√	√
fifteen	JS180-1707155	Output Roller Rear Bearing Cover	one	√	√							
	F99967					√	√	√	√	√	√	√
sixteen	7992	Spitometer driven gear bushing	one	√	√	√	√	√	√	√	√	√
17	F91055	Speedometer driven gear	one	√	√	√	√	√	√	√	√	√
eighteen	F96005	Washer	one	√	√	√	√	√	√	√	√	√
nineteen	F93060	Spitometer fitting kit	one	√	√	√	√	√	√	√	√	√
twenty	X11412	Speedometer Protective Cover	one	√	√	√	√	√	√	√	√	√
21	C09033	Bolt assembly with hole with spring washer	one	√	√							
	GB32.1-88					√	√	√	√	√	√	√
22	Q1421075	Bolt assembly with spring washer	4	√	√							
	GB5782-86		5			√	√	√	√	√	√	√
23	A-C09009	Bolt kit	one	√	√							
24	C01032	Main shaft rear bearing cover oil seal		√	√	√	√	√	√	√	√	√
25	21036	Stuffing box	one	√	√	√	√	√	√	√	√	√

www.chinaheavytruckparts.com

26	F96119	Dust cover	one	√	√	√	√	√	√	√	√	√
27	JS220-1707159	Outlet flange	one	√	√							
	F99902					√	√	√	√	√	√	√

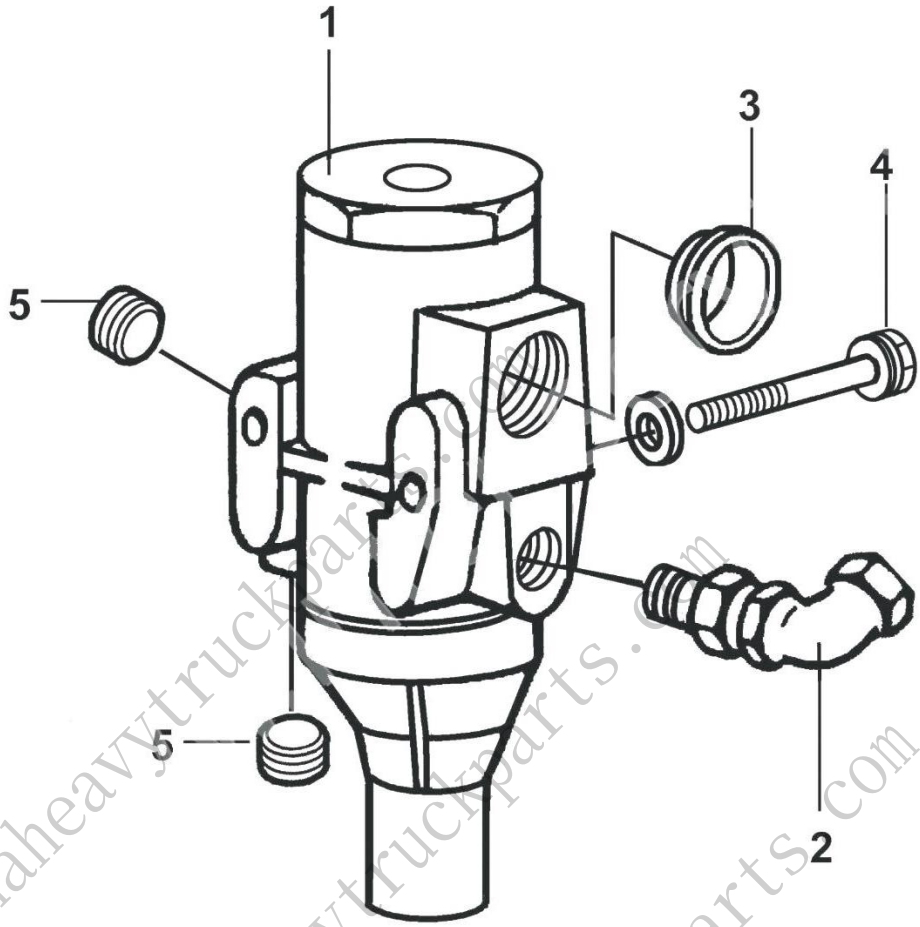

Air filter assembly

one	A-4740-1	Air filter	one	√	√	√	√	√	√	√	√	√
2	12845	Union 90 °	one	√	√	√	√	√	√	√	√	√
3	54015	CA Cup Stopper	one	√	√	√	√	√	√	√	√	√
4	1420660	Spring Shaft Bolt Assembly	2	√	√	√	√	√	√	√	√	√
5	C618B01	Conical plug	2	√	√	√	√	√	√	√	√	√

www.chinaheavytruckparts.com
www.chinaheavytruckparts.com
www.chinaheavytruckparts.com

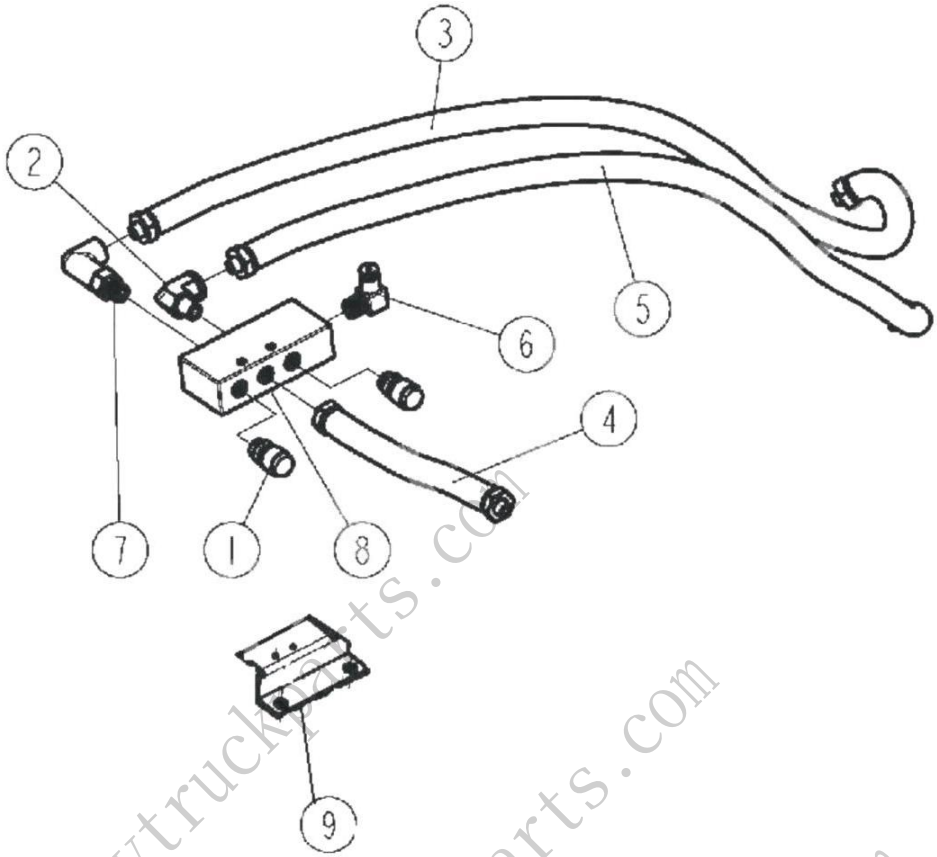

H valve assembly

one	7935	Vent plug	2
2	12845	Union 90 °	one
3	55511	Air tube kit	one
4	55512	Air tube kit	one
5	55521	Air tube kit	one
6	12JS160T-1703021	Union 90 °	one
7	12JS160T-1703051	Union 90 °	one
8	12JS160T-1703052	Valve H	one
nine	12JS160T-1702095	Valve support H	one

www.chinaheavytruckparts.com
www.chinaheavytruckparts.com
www.chinaheavytruckparts.com

https://chinaheavytruckparts.com/
market@chinaheavytruckparts.com